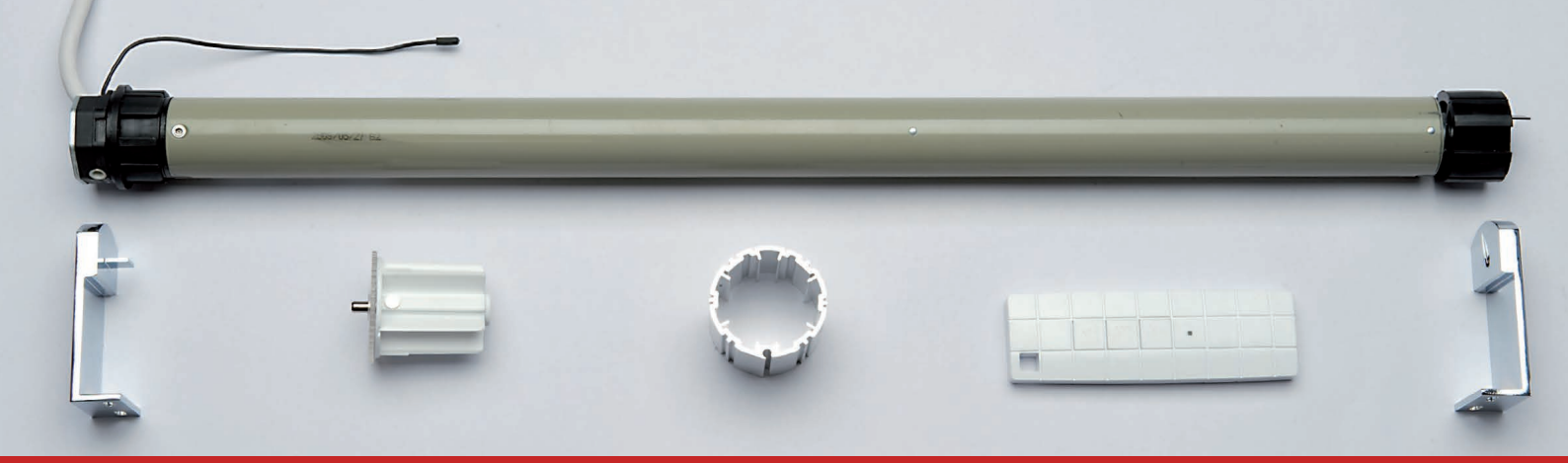

Enrollable a motor Ø35 / Motorized system Ø35

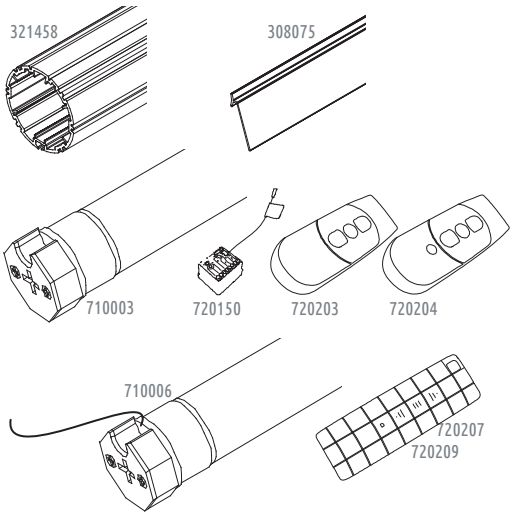

Sistema motor Ø35 / Ø35 Motor system

Ref.	Artículo / Article	Uni.	Datos / Data	Color	Mat.
321458	Tubo enrollable 48 / Roller tube 48	23,4m	Ø48mm	Al	Alum
308075	Macarrón plano / Plane plastic strip	200m	20x3mm	Tr	PVC
320758					
	Motor sin receptor / Motor without receiver				
710003	Motor tubular Ø35 / Ø35 tubular motor	1 u.	495mm 10Nm		18rpm
720150	Receptor externo / External receiver	1 u.	220v		
720203	Mando a distancia / Remote control	1 u.	1 canal/channel	B	ABS
720204	Mando multicanal / Remote control	1 u.	16 canales/chanels	B	ABS
	Motor con receptor / Motor with receiver				
710006	Motor tubular Ø35 / Ø35 tubular motor	1 u.	610mm 6Nm		28rpm
720207	Mando a distancia / Remote control	1 u.	1 canal/channel	B	ABS
720209	Mando a distancia / Remote control	1 u.	15 canales/channels	B	ABS

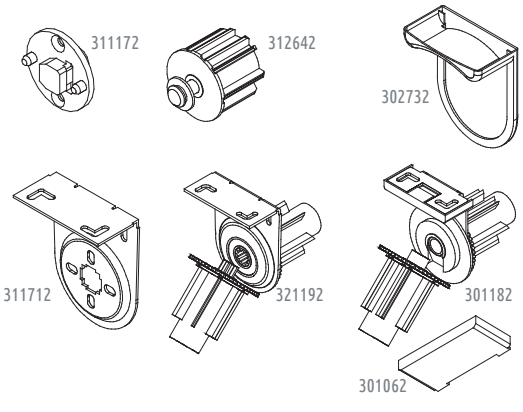

Sistema de soportes Titán / Titan supports system

Ref.	Artículo / Article	Uni.	Datos / Data	Color	Mat.
311172	Placa Titán-motor / Titan-motor adapter	50 u.	max. 10Nm	5 colors	PA
312642	Contera Titán / Titan end plug	20 u.	Ø44x55mm	5 colors	POM
302732	Tapa Lynx Titán / Lynx Titan bracket cover	80 u.	70x90x40mm	5 colors	PP
311712	Soporte Titán / Titan bracket	40 u.	5,5cm	5 colors	Met
321192	Soporte central / Central support 5,5cm	30 sets	1mando/control	5 colors	Met
301182	Soporte central / Central support 5,5cm	50 sets	2mandos/controls	5 colors	Met
301062	Tapa-tornillos / Screws cover	100 u.	Levante	5 colors	PP

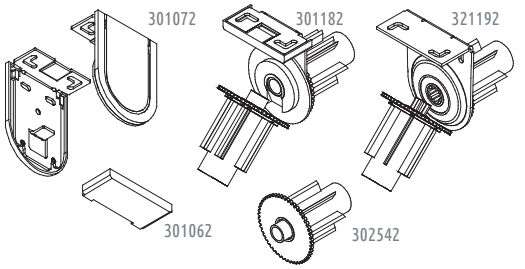

Sistema de soportes Levante / Levante supports system

Ref.	Artículo / Article	Uni.	Datos / Data	Color	Mat.
301072	Set soportes+tapas / Supports+caps set	50 u.	5,5cm	5 colors	Met
301182	Soporte central / Central support 5,5cm	50 sets	2mandos/controls	5 colors	Met
321192	Soporte central / Central support 5,5cm	30 sets	1mando/control	5 colors	Met
301062	Tapa-tornillos / Screws cover	100 u.	Levante	5 colors	PP
302542	Contera Levante II / Levante II end plug	100 u.	Ø44mm	5 colors	POM

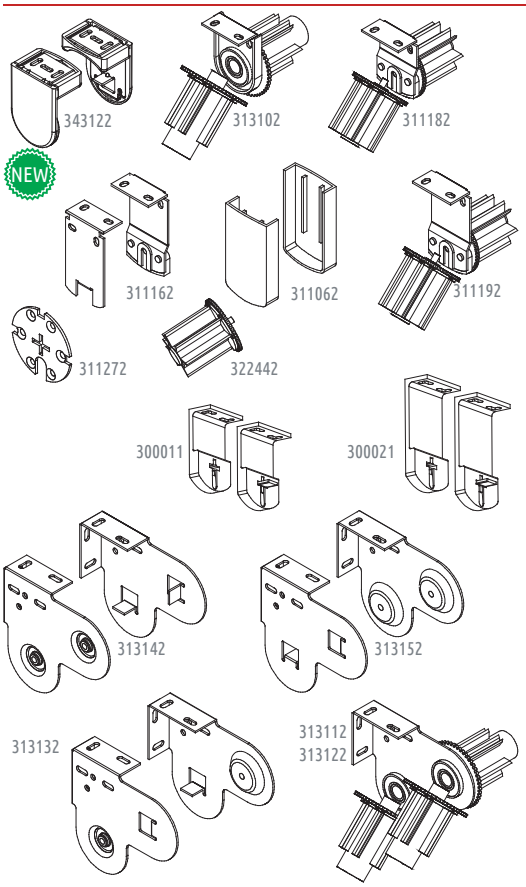

Sistema de soportes Rutroller / Rutroller supports system

Ref.	Artículo / Article	Uni.	Datos / Data	Color	Mat.
343122	Soportes Lynx 12 / Lynx 12 supports	100 sets	51x70x12mm	B G Bg N	Met
313102	Soporte central / Central support 4cm	10 sets	1 mando/control	B G Bg N	Met
311182	Soporte central / Central support 4cm	10 sets	2 mandos/controls	B G Bg N	Met
311162	Juego soportes / Supports set	30 sets	6cm	5 colors	Met
311062	Juego tapas / End caps set	30 sets	6cm	5 colors	PP
311192	Soporte central / Central support 6cm	10 sets	2 mandos/controls	B G Bg N	Met
311272	Placa Rutroller /Rutroller plate	100 u.	motor Ø35mm	N	Met
322442	Contrapunto Rutroller / Rutroller end plug	25 u.	Ø44mm	5 colors	POM

Sistema Rutdecor / Rutdecor system

300011	Juego soportes 4cm / Supports set 4cm	15 sets	40x60mm	Cn Cr Gt	Met
300021	Juego soportes 6cm / Supports set 6cm	10 sets	40x80mm	Cn Cr Gt	Met

Soportes dobles / Double supports

313142	Soportes dobles / Double supports	8 sets	derecha / right	B G Bg N	Met
313152	Soportes dobles / Double supports	8 sets	izquierda / left	B G Bg N	Met
313132	Soportes dobles / Double supports	8 sets	opuestos/opposite	B G Bg N	Met
313112	Central doble / Double central support	10 sets	2mandos/controls	B G Bg N	Met
313122	Central doble / Double central support	10 sets	4mandos/controls	B G Bg N	Met

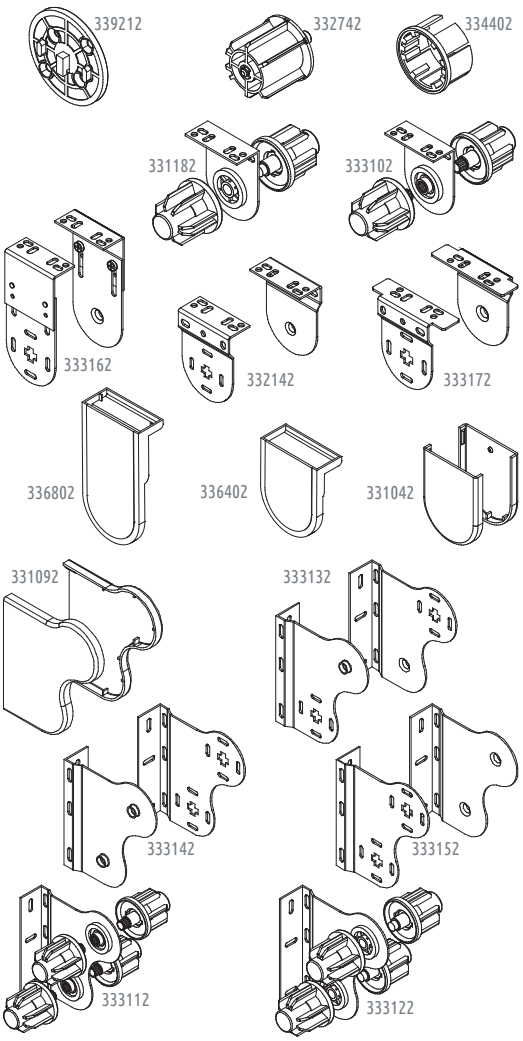

Sistema de soportes Fígaro / Figaro supports system

Ref.	Artículo / Article	Uni.	Datos / Data	Color	Mat.
339212	Placa LSC / LSC plate	80 u.	max. 10Nm	4 + decor	PA
332742	Contera LSC-Fígaro / LSC-Fígaro end plug	20 u.	Ø44mm	4 colors	POM
334402	Adaptador Fígaro / Figaro adapter	40 u.	Ø38->Ø44/48	4 colors	POM
331182	Soporte central / Central support	50 sets	2mandos/controls	4 colors	Met
333102	Soporte central / Central support	50 sets	1mando/control	4 colors	Met
333162	Sop. extensible / Extendable support	25 sets	65-90mm	4 colors	Met
332142	Soportes 4cm / 4cm Supports	100 sets	40mm	4 colors	Met
333172	Soportes con alas / Support with wings	40 sets	4 - 7,5cm	4 colors	Met
336402	Funda Encélado 4cm / Encelado cover	105 u.	59x72mm	4 + decor	ABS
336802	Funda Encélado 8cm / Encelado cover	70 u.	59x112mm	4 + decor	ABS
331042	Juego tapas Fígaro / Figaro end caps	50 sets	70x55mm	4 colors	PP

Soportes dobles / Double supports

331092	Tapas sop. doble / Double support caps	10 sets		4 colors	PP
333132	Soportes opuestos / Opposite supports	10 sets		4 colors	Met
333142	Soportes derecha / Right hand supports	10 sets		4 colors	Met
333152	Soportes izquierda / Left hand supports	10 sets		4 colors	Met
333112	Central doble / Double central support	5 sets	2mandos/controls	4 colors	Met
333122	Central doble / Double central support	5 sets	4mandos/controls	4 colors	Met

Enrollable a motor Ø45 / Motorized system Ø45

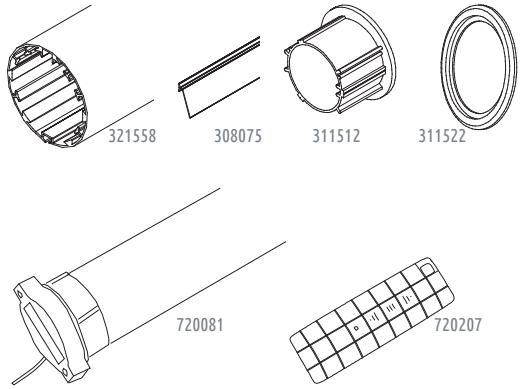

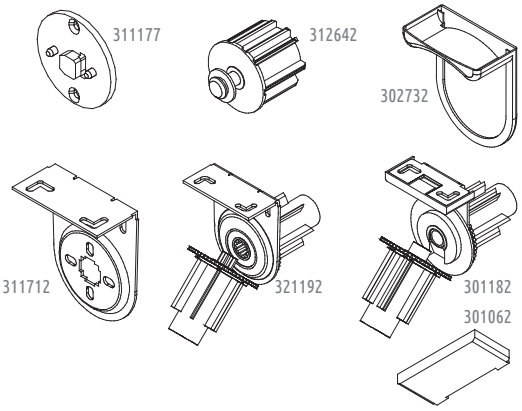

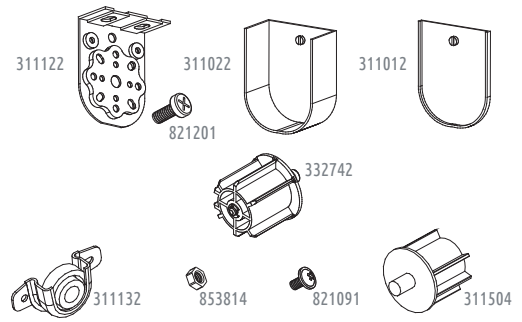

Sistema motor Ø45 / Ø45 Motor system

Ref.	Artículo / Article	Uni.	Datos / Data	Color	Mat.
321558	Tubo enrollable 58 / Roller tube 58	23,4m	Ø58mm	Al	Alum
308075	Macarrón plano / Plane plastic strip	200m	20x3mm	Tr	PVC
311512	Multiadaptador / Multiadapter	20 u.	Ø44 --> Ø53-58	5 colors	POM
311522	Anilla tubo Ø70 / Ø70 Tube ring	10 u.	Ø52-70 mm	B G N	PP
Motor con receptor / Motor with receiver					
720081	Motor tubular Ø45 / Ø45 tubular motor	1 u.	20Nm 15rpm		Met
720207	Mando a distancia / Remote control	1 u.	1 canal/channel	B	ABS
Sistema de soportes Titán / Titan supports system					
311177	Placa Titán-motor / Titan-motor adapter	50 u.	max. 10Nm	5 colors	PA
312642	Contera Titán / Titan end plug	20 u.	Ø44x55mm	5 colors	POM
302732	Tapa Lynx Titán / Lynx Titan bracket cover	80 u.	70x90x40mm	5 colors	PP
311712	Soporte Titán / Titan bracket	40 u.	5,5cm	5 colors	Met
321192	Soporte central / Central support 5,5cm	30 sets	1mando/control	5 colors	Met
301182	Soporte central / Central support 5,5cm	50 sets	2mandos/controls	5 colors	Met
301062	Tapa-tornillos / Screws cover	100 u.	Levante	5 colors	PP
Sistema de soportes M.A. / M.A. supports system					
311122	Soportes M.A. / M.A. supports	15 sets	38x94x80mm	B G N	Met
311022	Tapas M.A. / M.A. end caps	5 sets	28x97x80mm	B G N	PP
311012	Tapas M.A. cortas / M.A. short end caps	15 sets	4x97x80mm	B G N	PP
821201	Tornillo / Screw M5x10mm	2 u.	DIN7985	Zn	Met
332742	Contera LSC-Fígaro / LSC-Fígaro end plug	20 u.	Ø8 - Ø44mm	5 colors	POM
311132	Cojinete M.A. / M.A. bearing	25 u.	Ø10mm	Zn	Met
821091	Tornillo / Screw M4x 8mm	100 u.	DIN967	Zn	Met
853814	Tuerca M4 / Nut M4	100 u.	DIN934	Zn	Met
311504	Contera redonda / Round end plug	25 u.	Ø10 - 44mm	N	PP

tecnalia Inspiring Business

www.tecnalia.com

REPORT No. 14_06497

CUSTOMER	RUTPERFIL S.L.
APPLICANT	Antoni Hernández
ADDRESS	CAMI ELENA Nº3 NAVE C 08339 VILASSAR DE DALT (BARCELONA) SPAIN
PURPOSE	Tests according to section 6 of EN16434:2014 : Internal blinds Protection from strangulation hazards. Requirements and test methods for safety devices.
MATERIAL TESTED	Tensioning device ref. "MURCIA 905672"
DATE OF RECEIPT	19/09/2014
TEST DATES	06/10/2014 - 27/10/2014
DATE ISSUED	28/10/2014

Razón Social / FUNDACIÓN TECNALIA RESEARCH & INNOVATIO N Nº F - 69 Registro de Fundaciones del Gobierno Vasco CIF G48975767

tecnalia Inspiring Business

Firmado por: OIHANA PLAZAOLA FRESNO
Fecha y hora: 28.10.2014 15:52:28

Oihana Plazaola
Technical Consultant
Construction - Services

* The results of this report solely and exclusively concern the material tested at the time and under the conditions in which the measurements were taken.
* This report shall not be reproduced without the express authorisation of FUNDACIÓN TECNALIA R&I, except where done so in its entirety.

TECNALIA RESEARCH & INNOVATION
Área Anardi, 5
E - 20730 Azpeitia (Gipuzkoa)

T 902 760 020
T +34 946 430 850 (International calls)

Sede Social / Headquarters
Parque Científico y Tecnológico Bizkaia
C/Geldo, Edificio 700
E - 48160 Derio - Bizkaia (Spain)